dukane precast

WALL PANEL BASE CONNECTION @ FDN. WALL

NOTE:

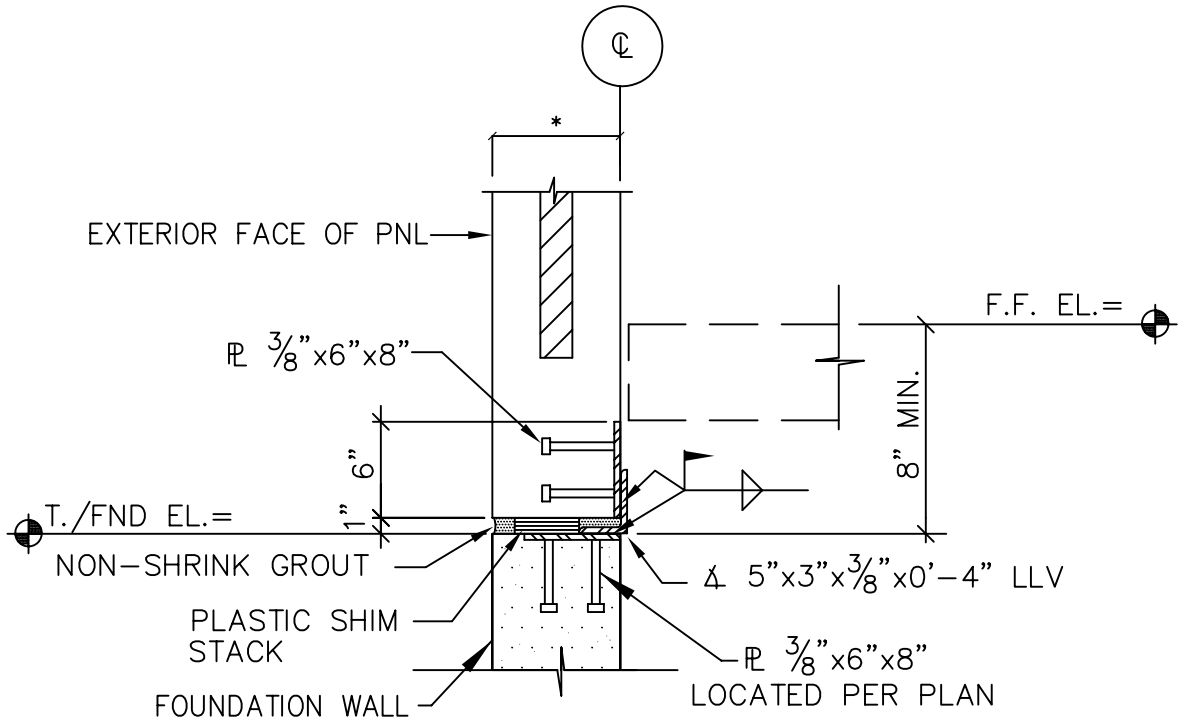

*= VARIES

REVISIONS:	DATE:	APPROVED FOR PRODUCTION:	FILE NAME:
	DR:	DATE:	DPF-1
	CK:	JOB NO.:	